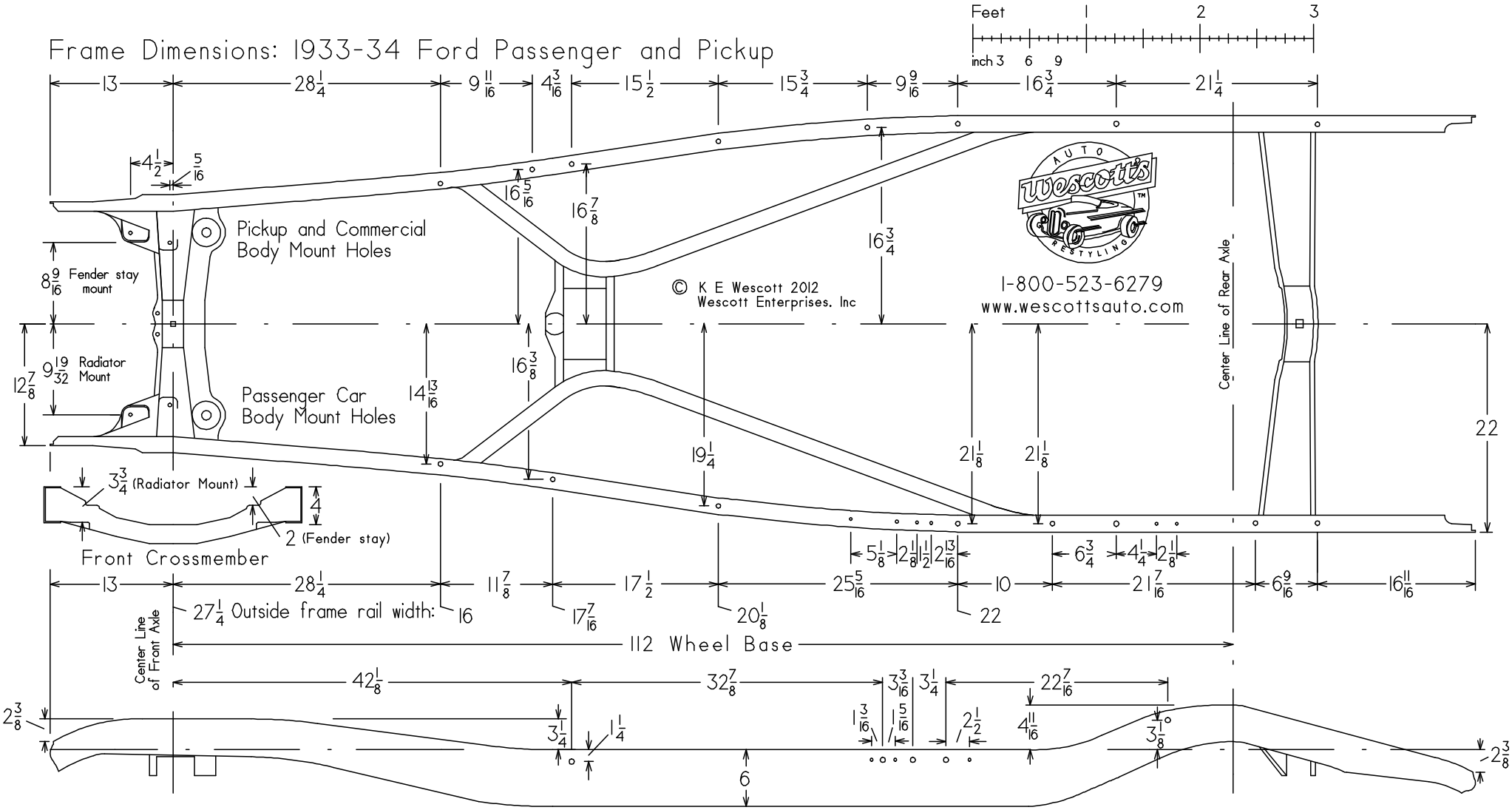

Frame Diagram: 1933-34 Ford (Passenger Car and Pickup)